Architecture Overview

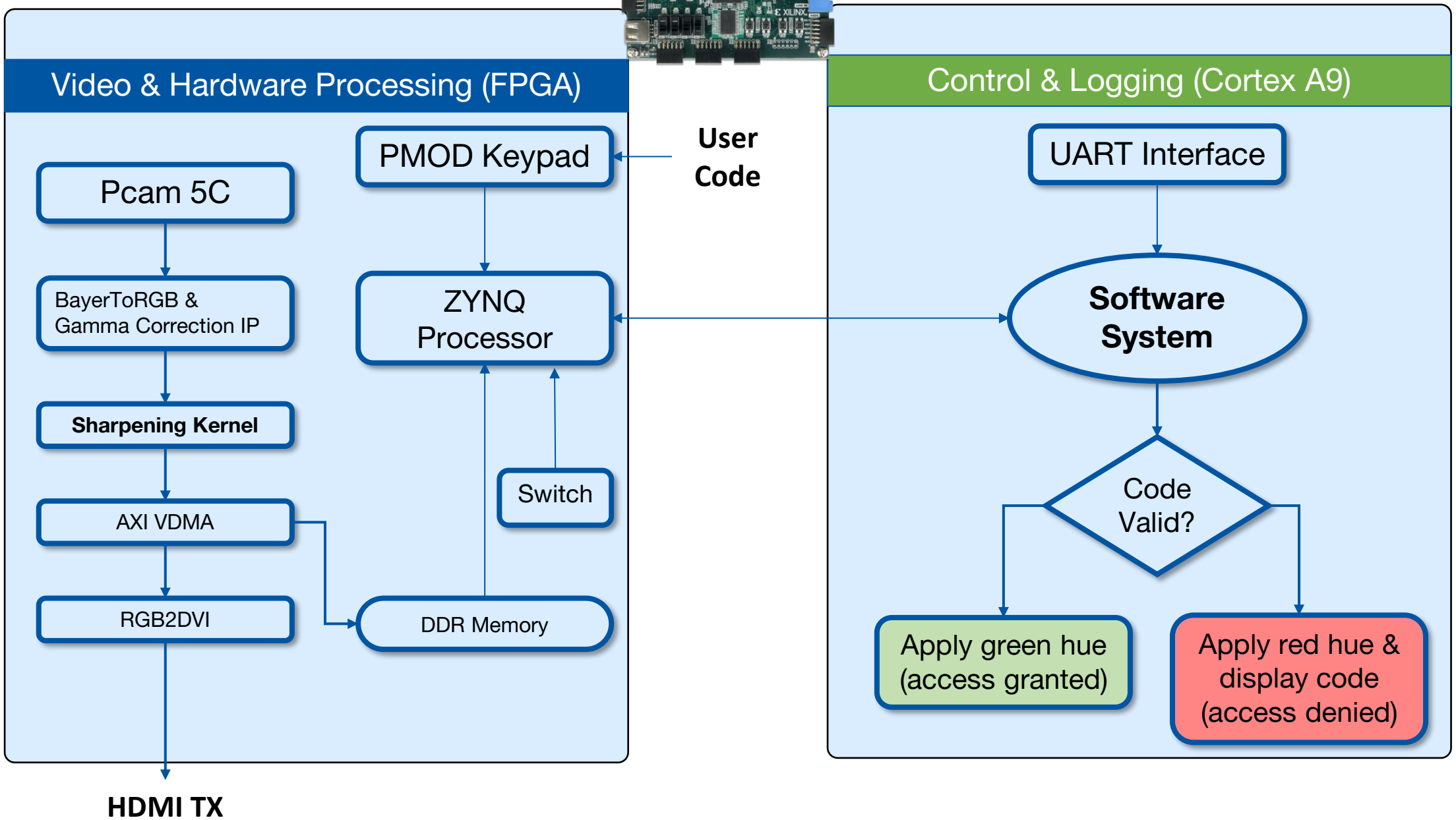

Architecture Close-up

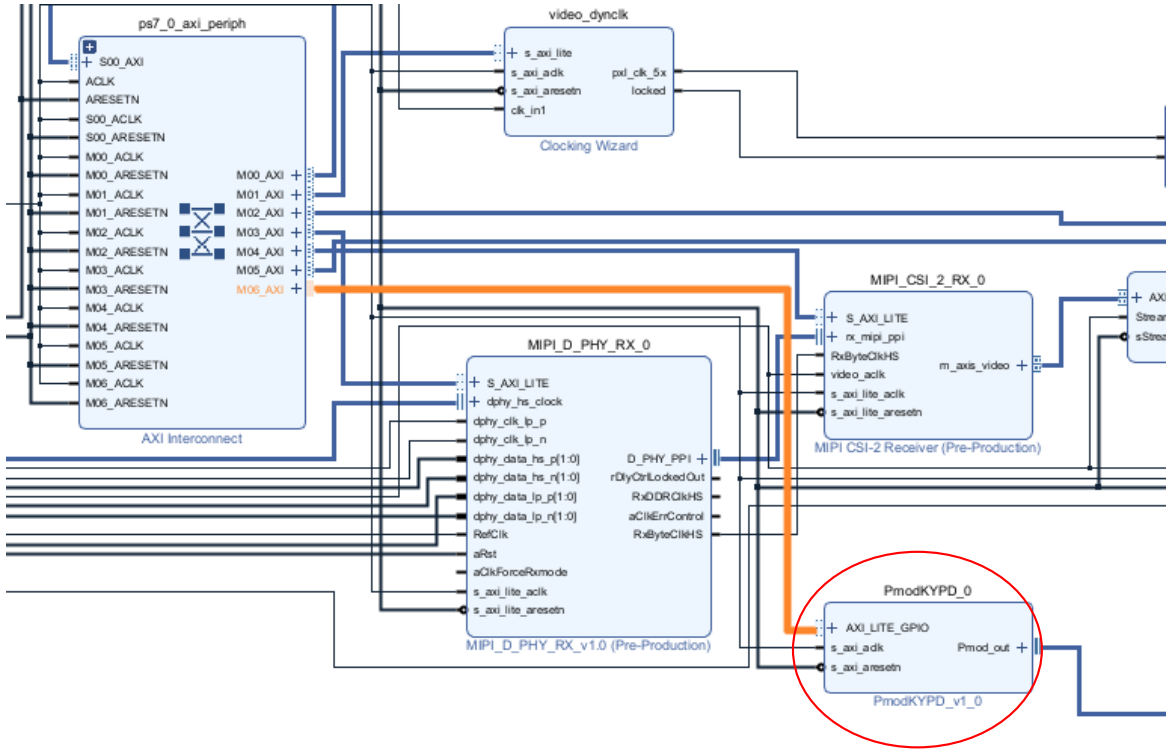

1. Expanded the AXI interconnect to accommodate one more IP.

1. Integrated the KYPD PMOD IP via AXI Lite for Control. The “make external” tool in vivado was used to connect PMOD JE constraints

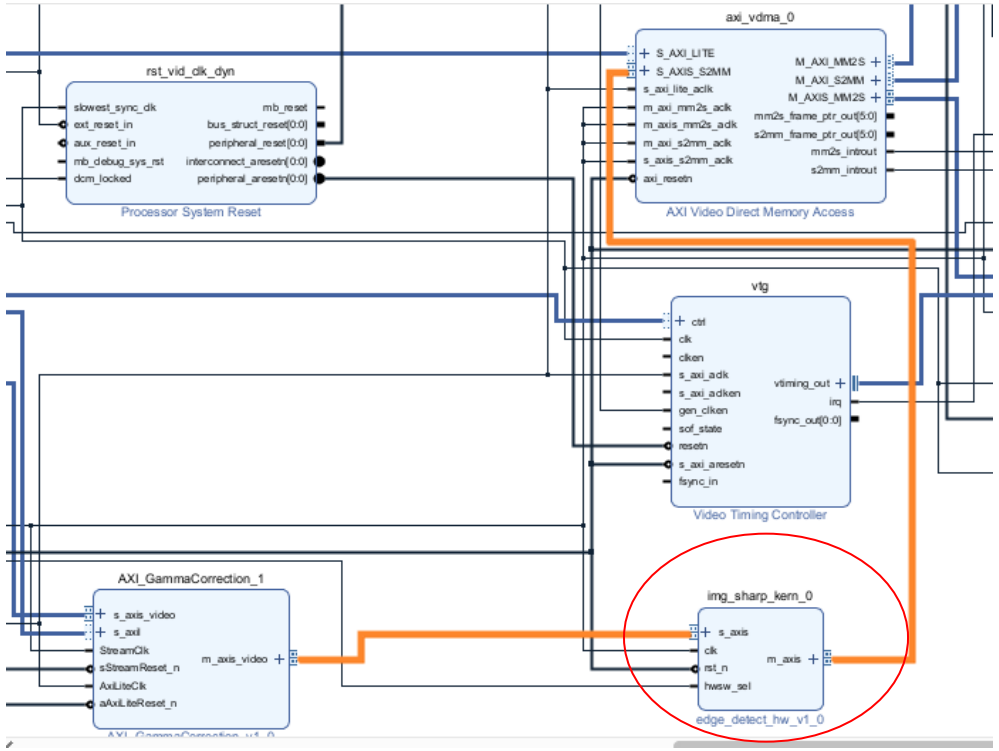

1. Used the base camera lab to integrate a image processing kernel.
2. The route from gamma correction IP block to VDMA was broken and the custom kernel IP was inserted in between.

Image Capture & Gallery

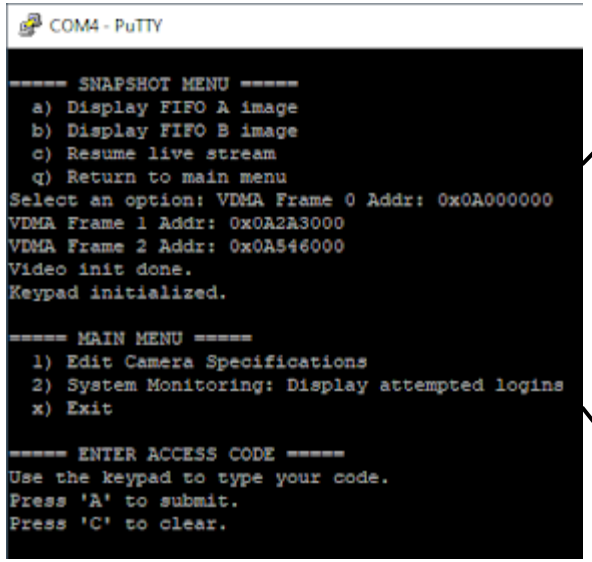

Camera mode (default)

Correct code

FIFO A: Green hue

FIFO A

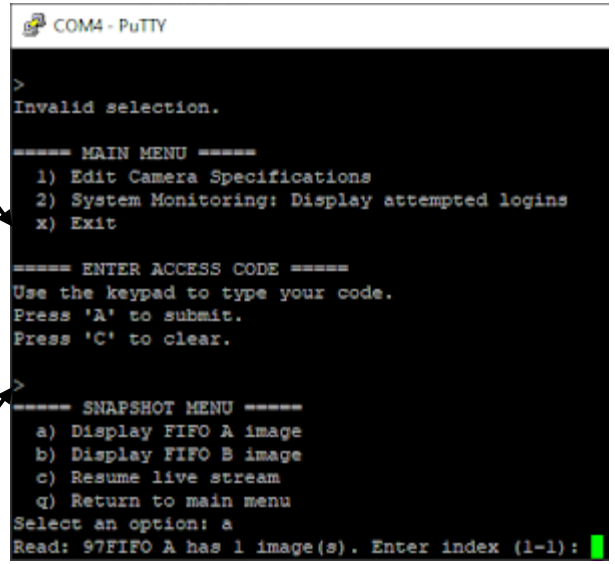

Gallery mode (review)

Incorrect code

FIFO B: Red hue +
incorrect code overlay

FIFO B